Point-KAN: Leveraging Trustworthy AI for Reliable 3-D Point Cloud Completion With Kolmogorov-Arnold Networks for 6G-IoT Applications

Arun Kumar Sangaiah, *Senior Member, IEEE*, Jayakrishnan Anandakrishnan, *Member, IEEE*, Sujith Kumar, *Member, IEEE*, Gui-Bin Bian, *Member, IEEE*, Salman A. AlQahtani, *Member, IEEE*, and Dirk Draheim, *Member, IEEE*

***Abstract*—3-D point clouds are data points defining the morphology of environments, and completion refers to the reconstruction of missing points. 6G Internet of Things (6G-IoT) connected with 3-D mapping devices needs reliable, consistent, high-fidelity real-time point cloud completion for accurate environment registration. Trustworthy AI, modeled with dependable deep learning (DL), enables reliable and robust point completion with spatial-geometrical consistency for deployment with 6G-IoT devices. Although several DL-based completion techniques are integrated with 6G-IoT devices, they have reliability issues, limiting key trustworthy AI characteristics. This research focuses on the reliability and robustness aspects of trustworthy AI to propose Point-Kolmogorov–Arnold Network (KAN), a dependable real-time 3-D point cloud completion model for 6G IoT-connected 3-D mapping devices. Point-KAN integrates multihead attention and KAN within the modules of attention enhanced-embedded feature collector (AEFC) and KAN-enhanced feature mapper (KEFM) for trustworthy point cloud completion. Empirical evaluations on the ShapeNet demonstrate the superiority of Point-KAN against state-of-the-art (SOTA). Results concrete Point-KAN's evolution as a trustworthy AI framework ensures reliability and robustness for real-time deployment in 6G-IoT-connected devices, facilitating 3-D environment mapping.**

***Index Terms*—3-D point cloud completion, 6G, IoT, Kolmogorov–Arnold networks (KANs), trustworthy AI.**

Received 19 February 2025; revised 18 April 2025 and 19 May 2025; accepted 1 June 2025. Date of publication 4 June 2025; date of current version 23 February 2026. This work was supported in part by the Ministry of Education (MOE), Taiwan, under the Yushan Young Scholar Fellowship under Grant MOE-111-A013; in part by the National Science and Technology Council (NSTC) of Taiwan under Grant NSTC 113-2221-E-224-054-MY3; in part by the Deanship of Scientific Research at King Saud University for Funding Part of this work through the Research Group Project under Project ORF-2025-585; in part by the National Key Research and Development Program of China under Grant 2023YFE0110200 and Grant 2022YFB4702900; and in part by the Beijing Haidian Joint Fund under Grant L232038. *(Corresponding authors: Jayakrishnan Anandakrishnan; Gui-Bin Bian.)*

Arun Kumar Sangaiah is with the International Graduate School of AI, National Yunlin University of Science and Technology, Douliu 64002, Taiwan (e-mail: aksangaiah@ieee.org).

Jayakrishnan Anandakrishnan is with the International Graduate School of AI, National Yunlin University of Science and Technology, Yunlin 64002, Taiwan (e-mail: jaykrizz@gmail.com).

Sujith Kumar is with the Department of Computer Science and Engineering, National Institute of Technology Puducherry, Karaikal 609609, India (e-mail: sujithkumara1729@gmail.com).

Gui-Bin Bian is with the Institute of Automation, National Key Laboratory for Multimodal Artificial Intelligence Systems, Chinese Academy of Sciences, Beijing 100190, China (e-mail: guibin.bian@ia.ac.cn).

Salman A. AlQahtani is with the New Emerging Technologies and 5G Network and Beyond Research Chair, Department of Computer Engineering, College of Computer and Information Sciences, King Saud University, Riyadh 11543, Saudi Arabia (e-mail: salmanq@ksu.edu.sa).

Dirk Draheim is with the Information Systems Group, School of Information Technologies, Tallinn University of Technology, 12618 Tallinn, Estonia (e-mail: dirk.draheim@ttu.ee).

Digital Object Identifier 10.1109/JIOT.2025.3576434

I. Introduction

CONNECTED AR/VR devices and other 3-D mapping devices demand highly accurate and trustable real-time point cloud completion to guarantee accurate environmental registration. The advancements achieved in 3-D scanning boosted the use of 3-D-point clouds for various applications on 6G Internet of Things (6G-IoT) integrated platforms, including robotics, machine vision, and virtual reality [1]. Integrating point cloud completion toward these applications requires reliability and robustness that can be offered by trustable AI integration with sophisticated deep learning (DL) techniques. Trustworthy AI integration with point cloud completion tasks can deliver dense high-fidelity point cloud processing, enabling real-time decision-making for exact mapping of the geometrical position, depth, and structure of an object of interest. 3-D-point cloud misregistration and incompleteness due to issues from sensor alignment, light reflections, and noise are significant challenges, where the reliability and robustness characteristics of trustable AI can play a major role [2].

Integrating trustworthy AI with point cloud completion tasks is crucial, considering the variety of applications for which LiDAR-based 3-D point cloud completion can be used. The applicability ranges from environmental monitoring and 3-D antique heritage registrations, forensic studies, athletics, and healthcare to AR/VR, robotics, and 3-D printing [3], [4], [5], [6], [7]. The applicability of these point cloud completion strategies is numerous when integrated with a 6G IoT-connected platform. This is only possible with strong integration of real-time completion enabled by trustworthy AI at the edge. Fig. 1 illustrates the potential scope of trustable AI in integration with 6G-IoT connected devices, particularly addressing real-time point cloud completion for accurate environmental mapping. The first scenario in Fig. 1 is autonomous driving, where the LiDAR sensor on the car creates the 3-D map of the environment, gathering information about objects, roads, and their depth. Point-Kolmogorov–Arnold Network

2327-4662 © 2025 IEEE. All rights reserved, including rights for text and data mining, and training of artificial intelligence and similar technologies. Personal use is permitted, but republication/redistribution requires IEEE permission.
See https://www.ieee.org/publications/rights/index.html for more information.
Authorized licensed use limited to: Technological University of the Shannon. Downloaded on March 16,2026 at 07:34:59 UTC from IEEE Xplore. Restrictions apply.

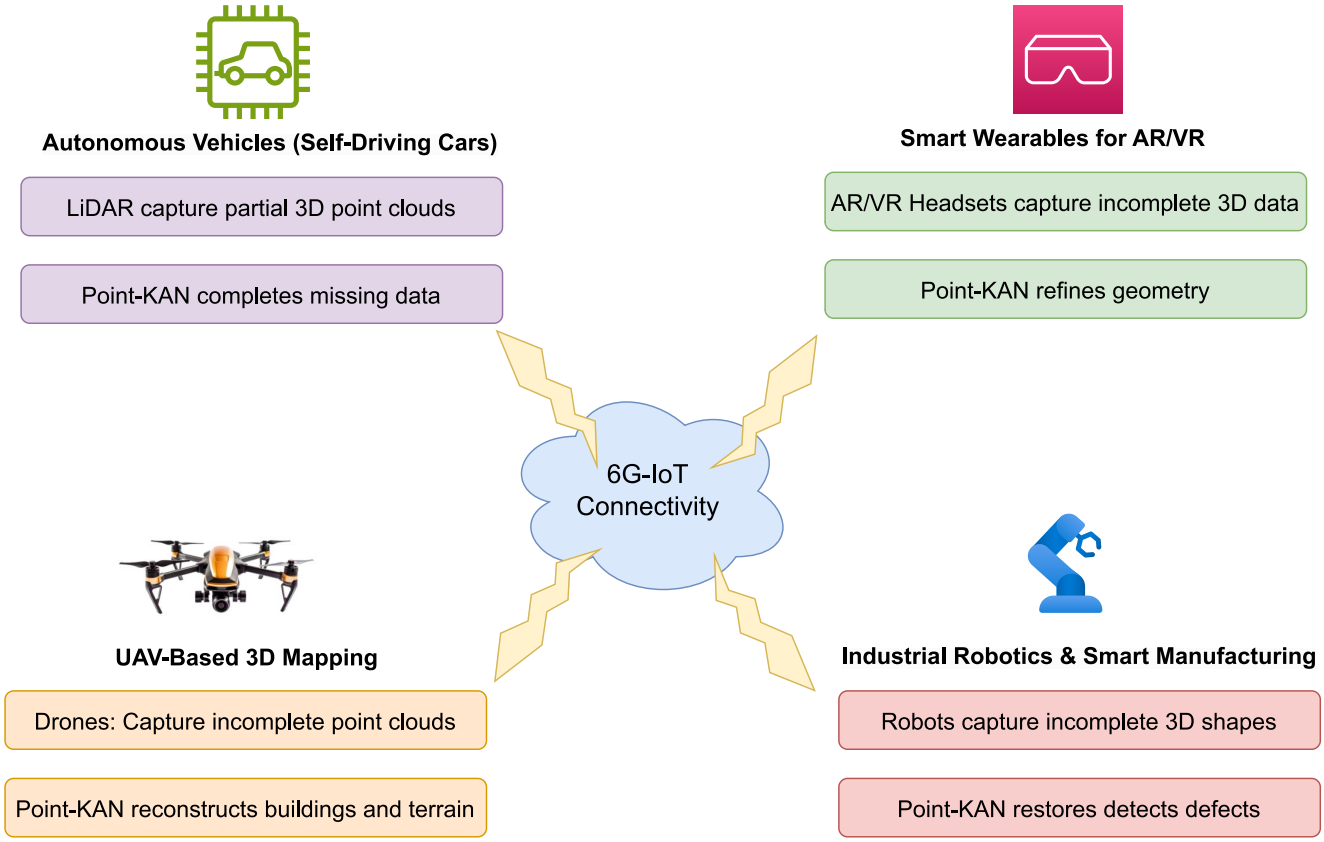

Fig. 1. Architectural integration of 6G-IoT connected intelligence for trustworthy point cloud completion across various use cases. Point-KAN is chosen as the point cloud completion framework.

(KAN) completes missing data and reconstructs a high-fidelity 3-D scene, while 6G-IoT integration ensures connectivity to central servers and connected vehicles. The second scenario involves smart wearables for AR/VR, where incomplete data from the user's environment is completed with Point-KAN on edge devices, redefining geometry and sharing it via 6G-IoT for an interactive multiuser experience. The third scenario is UAV-based disaster monitoring, where a UAV equipped with LiDAR maps a disaster area to identify objects and pathways; Point-KAN completes the missing points and 3-D senses, relaying this information to the ground response team over 6G for response planning and action. The final scenario involves the smart manufacturing sector with automation and robotics, which also benefits from reliable point cloud completion. All these applications are highly dynamic and must ensure that the deployed AI is trustable for widescale adaptability.

Researchers have introduced various methods to address the challenges of trustable point cloud completion. The most popular completion methods are classical methods [8] and DL-based methods [2]. Classical point cloud regeneration strategies often suffer from their inability to account for object semantic information, failing for complex occlusion reconstructions. The current research trend is DL-based approaches, and many methods have been introduced to overcome the drawbacks of conventional approaches. Studies of converting 2-D completion or input techniques to 3-D reconstruction were among the early attempts. However, they struggles with performance and scalability issues [9], [10].

The initial point cloud generation technique is based on an encoder–decoder framework, which transforms a 2-D image input into multiple possible 3-D point cloud translations using conditional samplers [11]. The focus on DL-based techniques for 3-D point cloud completion expanded with the introduction of PointNet [12] and PointNet++ [13]. PointNet directly translated input point clouds without needing a voxel or mesh representation. PointNet++ evolved over its predecessor by incorporating clustering to perform multiscale learning. Implicit feature networks (IF-Nets) [14], gridding residual network (GRNet) [15], and SoftPoolNet [16] were the 3-D convolutions-based point cloud reconstructions. However, they were computationally complex to deploy to real-time edge scenarios. Several graph convolution networks (GCNs) were introduced for point cloud completion [17], [18], [19], [20]. However, they failed to compose the correlated spatial-geometrical relationships. Attention-based techniques have gained recent popularity, and GCN combines with attention-based techniques for more effective point cloud completion [21]. Point fractal network (PF-Net) considered point cloud completion as a multiscale generative problem and solved it using a generative adversarial network (GAN) modeling [22]. PMP-Net++ [23], SnowflakeNet [24], and PoinTr [25] models utilized transformer encoder–decoder frameworks to address the point cloud completion problem.

Authorized licensed use limited to: Technological University of the Shannon. Downloaded on March 16,2026 at 07:34:59 UTC from IEEE Xplore. Restrictions apply.

Although the literature has many methods for point cloud competition tasks, various techniques have inherent limitations affecting their reliability and trustworthiness, especially for real-time 6G-IoT-integrated applications. Limited research was conducted to integrate the point cloud completion scenario toward trustworthy reconstruction in dynamic 6G-IoT connected applications. Point-based 3-D-convolutional neural network (CNN) completion strategies suffer from preserving spatial-geometrical dependencies as they focus on maintaining permutation invariance and also suffer from computational complexities. Graph-based networks, VAEs, and GANs could not match quality and fidelity for trustable real-time applications, and transfer learning was too complex to be deployed on edge, limiting the real-time point cloud completion capabilities of 3-D mapping devices.

The proposed Point-KAN contributes to the deployment of trustworthy AI for real-time futuristic applications, ensuring reliable and robust point cloud completion. The trustworthiness of Point-KAN is ensured by the experimental evaluations on a competitive benchmark point completion dataset. Integration of optimal multihead attention (MHA) with the latest KAN to tackle the existing challenges ensuring reliable and high-fidelity 3-D point cloud completion while preserving spatial-geometrical relationships. Leveraging 6G-IoT connectivity, Point-KAN enables real-time, edge-assisted point cloud reconstruction for AR/VR, autonomous systems, and digital twin applications. The generative part of Point-KAN consists of key modules, including the attention enhanced-embedded feature collector (AEFC) and KAN-enhanced feature mapper (KEFM), ensuring trustworthy AI-driven point cloud completion. AEFC integrates a latent convolutional block (LCB) with standard 2-D convolutions and MHA to enhance reliability. In contrast, KEFM incorporates a KAN attention block (KAB), combining a standard KAN layer and MHA in a residual addition fashion, ensuring robust feature transformation for real-time, 6G-driven applications. The significant contributions of the proposed Point-KAN framework are listed below.

1) The proposed Point-KAN is a trustworthy AI-driven point cloud completion integrated with Attention and KAN for real-time 6G-IoT deployment in autonomous applications that require reliable point completion with low latency and computational efficiency.
2) The integration of attention mechanisms in the AEFC module ensures reliable learning of spatial dependencies by capturing local and global contextual information, enabling more stable and consistent point cloud completion.
3) The introduction of KAN layers in the KEFM block enhances the robustness of feature learning by improving nonlinear spatial understanding, ensuring high-fidelity, trustable reconstructions for integration with autonomous systems.
4) An extensive state-of-the-art (SOTA) analysis and ablation study validate Point-KAN on various test settings on benchmark datasets, ensuring trustworthy AI in Point-KAN. It demonstrates quality completion with minimal reconstruction loss and rapid completion time, making it highly reliable and robust for real-time 6G-IoT-integrated applications

The remainder of this article is arranged as follows. Section II provides a comprehensive analysis of relevant research on point cloud completion and shape reconstruction. Section III elaborates on the technique and architecture of the proposed Point-KAN point cloud completion framework. Section IV covers the experimental configuration, analysis of results, and discussion. Section V concludes the article with insightful observations, suggestions, and addresses future possibilities.

II. Related Work

The idea of trustworthy AI includes dependability, correctness, reliability, and timely functionality. AI trustworthiness is vital for wide applications on situation where human interventions are minimal and autonomous dependability is the ultimate concern. A regularizing Bayesian approach has been proposed to evaluate AI solutions trustworthiness by assessing characteristics, such as accuracy and reliability, including error levels and information entropy [26]. Additionally, a neural network-based accuracy monitor model has been introduced to estimate the accurate inference accuracy of deep neural networks (DNNs) by analyzing softmax probability outputs, thereby improving the reliability of DNNs in real-world applications [27]. In industrial IoT systems, a trusted, robust, intelligent control strategy has been developed to enhance the reliability of cyber–physical systems (CPS). This approach utilizes spatiotemporal correlation analysis and real-time preventive measures to improve system dependability [28]. Trustworthy AI systems must consistently demonstrate high reliability and accuracy in their operations, ensuring stable performance under varying conditions and delivering precise outputs based on processed data [29], [30]. Robustness to AI includes the ability to withstand adversarial input and maintain stable performance irrespective of input data changes. This is important in ensuring AI systems cannot be manipulated or diverted. Real-time performance is also important, particularly in autonomous AI systems that must make real-time decisions. These systems must efficiently process data and generate rapid responses to ensure operational effectiveness [31]. To build trust, AI systems must be accurate and reliable and provide consistency and reliability over time, particularly in sensitive areas like healthcare [32]. Nevertheless, the inherent lack of transparency or explainability in the decision-making process of AI models makes it challenging to measure their accuracy and reliability. Explainable AI (XAI) has been proposed to enhance transparency, thereby improving user confidence and trust in AI-driven decisions [33]. Studies on integrating trustworthy AI and assessing its characteristics to ensure the reliability of algorithms and techniques for real-time point cloud completion have been minimal. The following sections discuss the available completion techniques.

Geometry-based approaches focus on structural hints and deduce the missing shape details without the help of any auxiliary supervision. Early research focused on small hole filling in 3-D models. The hole-filling technique fills random

Authorized licensed use limited to: Technological University of the Shannon. Downloaded on March 16,2026 at 07:34:59 UTC from IEEE Xplore. Restrictions apply.

hotels in triangulated mesh representations by solving a Poisson equation for grid coordinate estimation [34]. Physical diffusion model-based two-stage strategy enabled hole filling with evident characteristics by alternating between expected propagation and position sampling [35]. 3-DPatchMatch, an optimized completion strategy that reduced search convergence time using point cloud consistency and a random Gaussian process [36]. Missing data reconstruction by alignment techniques aligns the completion by detecting and transferring the shape characteristics from a known 3-D-model database [37], [38], [39]. However, these alignment-based techniques were based on the hypothesis that the database contains 3-D objects that highly match the object to be reconstructed.

Voxel-based approaches transform unstructured point clouds into a structured 3-D voxel representation, allowing CNNs to complete shape. A convolutional deep belief network (CDBN) framework represented 3-D shapes as probabilistic distributions within a voxel grid, allowing 3-D shape reconstruction from depth maps [40]. An improved variant of this method integrated Markov random field (MRF) with CDBN, transforming the completion problem into a maximum posterior probability (MAP) evaluation [41]. A completion algorithm was introduced that combined global structure inference and local geometric fine-tuning using an LSTM-based model and a 3-D complete convolution module [42]. 3-D-EPN [9] and GRNet [15] improved the performance of point cloud completion by integrating 3-D convolutions to maintain maintaining spatial-geometrical integrity. Another approach introduced a voxel-based network, VE-PCN, integrating edge generation to enhance granular aspects, mapping points onto 3-D arrays, and utilizing inferred shape edges to produce realistic surface features [43].

Point feature-based approaches utilize Deep CNNs explicitly designed for unordered point clouds. PointNet [12] and its extension PointNet++ [13] pioneered this domain, using multilayer perceptrons (MLPs) to process individual points while employing symmetric functions for permutation invariance and robustness. Methods for completion can be broadly classified into paired and unpaired based on the training strategy. Paired training methods can be further divided into sparse and dense completion approaches. Sparse completion methods focus on completing point clouds with no more than 2048 points. Several sparse completion techniques have been proposed in recent years. FoldingNet [44] introduced an autoencoder with a graph-based encoder [45] to enhance local structure representation in PointNet and transform a 2-D mesh into a smooth 3-D layer. SA-Net [46] incorporated a skip attention strategy with PointNet++ as a backbone in the encoder. GANs have come into the picture to generate missing points in space point cloud completion strategies. However, the performance of GANs decreased as the missing points increased [47], [48], [49]. PF-NET predicted only missing regions while preserving spatial consistency, unlike methods that reconstruct entire point clouds [22]. SFA-Net [50] and Hyperpocket [51] also contributed to the sparse point cloud completion strategies.

Dense point clouds capture finer details and richer feature information. A deep neural network-extracting multilevel features were introduced to produce denser and more evenly distributed point clouds from sparse data [52]. PCN, an encoder–decoder strategy for dense completion tasks, was introduced [53]. Furthermore, the completion strategies were extended to a multitask learning scheme for incomplete shapes from LiDAR scanning [54]. A GAN-based unpaired shape completion algorithm mapped between two distinct latent spaces to complete scans with improved accuracy but focused only on geometric correspondence, failing to understand 3-D shapes [55] fully. PGAN captured both local structures of incomplete point clouds and overall shapes using a multiscale generation module [56]. AGFA-Net incorporated separate attention blocks for spatial and channel context to efficiently transmit geometric features from localized areas of fragmented 3-D points to the reconstruction process [57]. The symmetry-aware upsampling module (SAUM) improved shape fidelity, particularly for intricate structures, by combining traditional methods [58]. A view-driven 3-D reconstruction method leveraged uni-perspective images to extract missing global geometrical details instead of relying solely on shape priors [59]. Weakly supervised 3-D shape completion using amortized maximum likelihood captured shape priors with a variational autoencoder, followed by an unsupervised encoder for latent representation [60]. PoinTr framed completion as a translation task using a transformer encoder–decoder framework [25], and dynamic query generation with denoising was later introduced [61]. Vaccine-Style-Net inferred continuous 3-D shapes from discrete points within the functional space of 3-D surfaces using reinforcement learning [62].

A two-step completion method combining Sequence Generation Completion for uniform prediction and a Resolution Scaling Network for detail enhancement was proposed for completion tasks [63]. The PIFC-Net is a GAN-based multimodal fusion network that improves UAV-based 3-D modeling by enhancing LiDAR point clouds with image data [64]. FACNet is a fast and accurate point cloud completion network that aligns global and local features to preserve shape and detail without coarse-to-fine stages [65]. Reference [66] presented MPC, a mutual prior-based completion framework that uses mutual information to align and complete low-overlapping partial point clouds progressively. RLGrid, a reinforcement learning-based point cloud completion method that adaptively selects grid deformation strategies using an RL agent [67]. Though a lot of study on point cloud completion, most studies concentrate just on reconstructing missing areas without thinking about real-time application and trustable AI integration. Reliability, robustness, and high-fidelity 3-D reconstructions for real-time applications still present difficult problems mostly unresolved. Our research proposes reliable and robust point cloud completion framework with trustable AI DL intgration specifically designed for 6G-IoT-connected devices.

Authorized licensed use limited to: Technological University of the Shannon. Downloaded on March 16,2026 at 07:34:59 UTC from IEEE Xplore. Restrictions apply.

III. Methodology

This section describes the methodology selected to perform point cloud completion, ensuring trustworthy AI backed with reliable and robust DL techniques for real-time applications. Point-KAN is designed with the MHA mechanism in the AEFC module, which learns from multiscale inputs to capture finer local dependencies and global contextual relationships. This multiscale strategy ensures the Point-KAN's ability to reconstruct 3-D structures accurately while ensuring consistency and reliability in diverse environments. Furthermore, the KAN layers in the KEFM block of Point-KAN incorporate Kolmogorov–Arnold representations (KARs) as an enhancement over traditional MLP layers by introducing learnable activation functions with a trainable 1-D function as a weight parameter. Integrating KAN in both the generator and discriminator reinforces the trustworthiness in point-cloud reconstruction. The following subsections elaborate on the modules and model design of Point-KAN, highlighting a combined working strategy that ensures the trustworthy AI capabilities of Point-KAN for 6G-IoT-driven immersive and connected environments.

A. Multihead Attention

Self-attention ensures that every element of the input is attending to every other element of the input, including itself. MHA facilitates the extraction of global and local dependencies by attending to data points at different locations of input; however, the use of multiple heads ensures that the attention operation is performed with different learnable parameters to concise various perspectives. The attention score A_{Score} of single-head attention is given by (1), where Q, K, V are the query, key, and value obtained by $Q = XW_Q, \quad K = XW_K, \quad V = XW_V$

$$A_{\text{Score}} = \text{softmax}\left(\frac{\text{QK}^T}{\sqrt{d_k}}\right)V. \tag{1}$$

The MHA score MH_{Score} with h heads is given by (2), where H_n compute individual attention score from head h, W^O stands for output transformation weight, and $\oplus$ indicate concatenation

$$\text{MH}_{\text{Score}} = \oplus(H_1, H_2, \ldots, H_n)W^O. \tag{2}$$

B. Residual Addition

Excessive stacking of convolutional layers leads to performance deterioration beyond a certain training threshold due to the vanishing gradient phenomenon. The use of residual connections in ResNet provided an alternative pathway for transmitting gradients to the lower layers, hence addressing gradient loss [68]. The remaining connections execute element-wise addition of the preceding layer's output with the output of the stacked layers. The identity function established by these residual connections prevents activations from diminishing to zero, facilitating learning over various depths.The residual learning function $F(x)$ is defined in

$$F(x) = G(x) + x \tag{3}$$

where, $G(x)$ is the output of the stacked layers, x is the actual input, and $+x$ indicate the residual addition.

C. Kolmogorov–Arnold Networks

KANs are an efficient, reliable and interpretable alternative for conventional MLPs. KANs are derived from the KAR theorem, which says that every multivariate function f can be expressed as a bounded combination of functions of a single variable combined with a binary operation of addition. KANs substitute univariate learnable functions for fixed activation functions in MLPs, giving them additional flexibility in representing intricate patterns. Unlike traditional MLPs, which depend on learnable fixed nonlinearities, such as ReLU or Tanh, KANs adaptively mold the activation behavior according to the data. This makes KANs capable of representing richer, finer-grained features necessary for irregular or highly nonlinear distributions in point clouds. Consequently, KANs offer more effective feature extraction and generalization than the traditional MLPs. KAR is given by (4), where Ψ_q is the addition function of individual univariate functions $\psi_{q,p}(x_p)$

$$f(\mathbf{x}) = f(x_1, \ldots, x_n) = \sum_{q=1}^{2n+1} \Psi_q \left(\sum_{p=1}^{n} \psi_{q,p}(x_p) \right). \tag{4}$$

KAN makes every connection in the network learnable with the utilization of B-spline activation and enables smooth and controlled learning of the complex functions $\psi_{q,p}(x_p)$ and Ψ_q. These function are approximated by using weighted sums of B-spline basis functions given in

$$\Psi_q(z) = \sum_j v_{q,j} B_j^m(z)$$
$$\psi_{q,p}(x_p) = \sum_i w_{q,p,i} B_i^k(x_p). \tag{5}$$

Backpropagation with B-splines finds the usual gradient loss concerning the spline coefficient and performs weight and spline coefficient updates.

D. Proposed Point-KAN Framework

The proposed Point-KAN is designed with a GAN framework that ensures the reliability and robustness of trustable AI computation with integrated operations of previous modules. The generator implements MHA with KAN linear transformation, whereas the discriminator also benefits from KANs instead of conventional MLPs. The architecture of the proposed generator, discriminator, and loss functions that guide reliable point cloud completion are discussed further.

1) Generator Module: The overall architecture of the Point-KAN generator module is shown in Fig. 2. The input point cloud is initially treated by the multiresolution encoding strategy adapted from PF-Net, in which the input point cloud of shape $B \times X \times 3$ is down-scaled to two more resolutions of $B \times (X/2) \times 3$ and $B \times [X/4] \times 3$ for finely graded feature extraction. Here B denotes batch size and each point is defined in 3-D space with coordinates (x, y, z). The down-scaling extract more abstract and meaningful features enabling Point-KAN to focus on compact and significant representations for efficient feature extraction. These input samples at various scales are then independently fed to the LCB of AEFC. The LCB implements three independent convolution layers (CL)

Authorized licensed use limited to: Technological University of the Shannon. Downloaded on March 16,2026 at 07:34:59 UTC from IEEE Xplore. Restrictions apply.

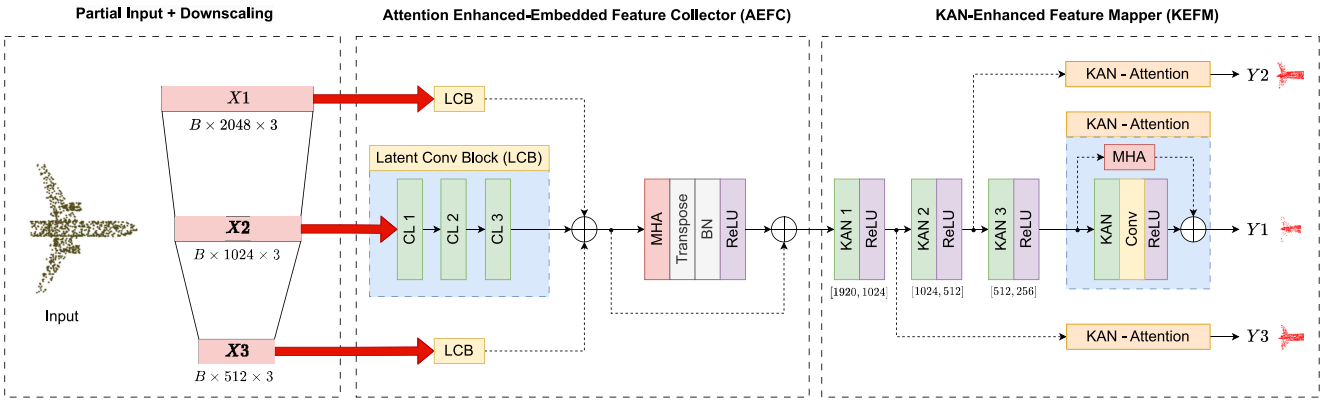

Fig. 2. Generator architecture of Point-KAN with AEFC and KEFM.

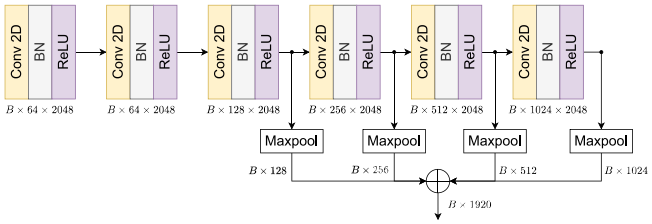

Fig. 3. Architecture of CL blocks for multiscale point cloud processing in the AEFC block of Point-KAN.

blocks arranged sequentially with a long skip connection, where each CL block performs a series of convolutions adopted from PF-Net followed by batch normalization and ReLU activation functions. The architecture of CL blocks are given in Fig. 3. These operations progressively increase the feature dimensions from 128 to 1024. Finally, the outputs from each block are concatenated per point, resulting in an aggregate feature map of size 1920. The output $\mathrm{LCB}_{\mathrm{out}}$ at each LCB are given by (6) revealing hierarchical convolutional feature extraction. The output from individual LCB are then concatenated and fed to the residual MHA layers. Attention scores from 16 different heads are concatenated and transformed to make a combined attention for passing on to KEFM. A transpose batch normalization and ReLU operations follows the MHA operation to stabilize the learning process and introduce nonlinearity and is given by

$$\mathrm{LCB}_{\mathrm{out}} = f_{CL3}(f_{CL2}(f_{CL1}(X_{\mathrm{in}}))) + \mathrm{LCB}_{\mathrm{in}} \tag{6}$$

$$\mathrm{AEFM}_{\mathrm{out}} = \mathrm{ReLU}(\mathrm{MHA}_{16}(\mathrm{LCB}_{\mathrm{out}})) + \mathrm{LCB}_{\mathrm{out}}. \tag{7}$$

The KEFM module replaces conventional MLPs with advanced KANs for efficient feature coding and mapping of spatial-geometrical relationship from point clouds. The $\mathrm{AEFM}_{\mathrm{out}}$ is now treated with a three sequential KAN layers along with ReLU activation. The KAN layers transform the input form 1920 to 256. The sequential KAN layer operation is given in (8), where i indicate the layer number and the input of first KAN (KAN_0) is $\mathrm{AEFM}_{\mathrm{out}}$. The intermediate output form each of the KAN layers are then fed to a final KAN layer with an integrated MHA residual addition and the output $F-\mathrm{KAN}_i$ is given by (9). The outcome of the generator module is three different point clouds of varying resolution,

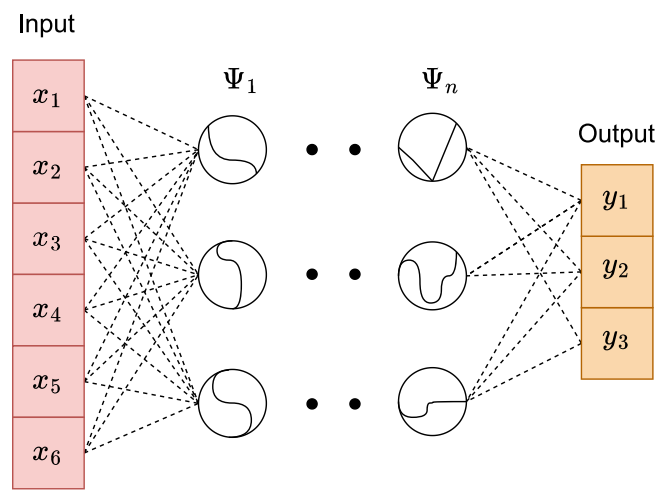

Fig. 4. Standard architecture of KAN, where Ψ_1 and Ψ_n indicate the learnable basis activation on the edges.

and later concatenated to produced a combined points of size 1920. A standard representation of the KAN architecture is given in Fig. 4

$$\mathrm{KAN}_i = \sigma_i(W_i * \mathrm{KAN}_{i-1} + b_i) \tag{8}$$

$$F-\mathrm{KAN}_i = \mathrm{ReLU}(\mathrm{KAN}(\mathrm{KAN}_i) + \mathrm{MHA}(\mathrm{KAN}_i)). \tag{9}$$

2) Discriminator Module: The discriminator module has a standard convolutional architecture and takes combined input from the generator module. The discriminator modules have four 2-D convolutions with a kernel size of 1, and each transforms the input to feature vectors of size 64, 64, 128, and 256. The final three convolved vectors of size 64, 128, and 256 undergo a maxpool operation and are concatenated to make a combined feature vector of size 448. This combined vector undergoes a sequential linear transformation with KAN Layers to 256, 128, 16 and finally to 1 for predicting true or false. The architecture of the discriminator in depicted Fig. 5.

3) Loss Function: The loss function consists of two components, including completion loss (L_{cl}) and adversarial loss (L_{al}), which are inspired by the studies of PF-Net [22], where chamfer distance (CD) is the permutation-invariant metrics selected for distance compute from the generator module that ensures geometric fidelity and structural completeness. The

Authorized licensed use limited to: Technological University of the Shannon. Downloaded on March 16,2026 at 07:34:59 UTC from IEEE Xplore. Restrictions apply.

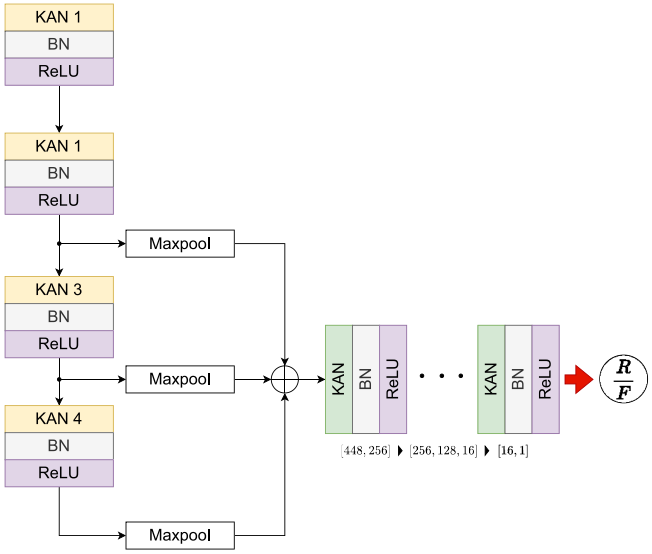

Fig. 5. Discriminator architecture of Point-KAN with KAN enhancement layers.

computation of standard loss is the total CD between the corresponding scaled output at the generator and scaled ground truth. The adversarial loss from the generator at various scales is added to the L_{al} to produce L_{total} and is given by (10). This combined loss function ensures reliable reconstruction for deployment in 3-D mapping devices for real-time application. This guidance of combined losses ensures the system is trustworthy and reliable for deployment

$$L_{\text{total}} = L_{cl} + L_{al}. \tag{10}$$

IV. Results and Discussion

A. Datasets and Experimental Setup

The Point-KAN completion framework is trained and tested on an NVIDIA GeForce RTX 4090 GPU Machine with 24-GB VRAM and 64-GB RAM. Point-KAN is trained against the popular ShapeNet dataset to ensure the SOTA performance and capabilities. ShapeNet is a richly annotated public large-scale repository of 3-D CAD models organized under the WordNet taxonomy. It includes over 220 000 3-D models classified into 3135 semantic categories from various object classes. All point clouds are first normalized to fit within an origin-centered unit sphere. From the complete shapes, 2048 points are randomly sampled. The dataset provides extensive annotations, including rigid alignments, part segmentation, bilateral symmetry planes, physical sizes, and keywords. The batch size B is set to 6 due to memory limitation, and the learning rate is set to 0.0005, and a dropout of 0.3 is applied. The number of attention heads in MHA are set to 16, and the dateset was trimmed to 50%, 25%, and 10% subsets for reevaluating the generalization. The model is optimized using the Adam optimizer, and CD is employed as the loss function.

B. Evaluation Metrics

1) Discriminator Loss (L_D): L_D measures the ability of the discriminator in a GAN to differentiate between real and generated data. It is typically formulated as a binary cross-entropy loss, where the discriminator tries to maximize its accuracy in classifying real data $D(x)$ as 1 and fake data $D(G(z))$ as 0. The L_D is given by (11). A lower L_D indicates better performance in identifying the data correctly

$$L_D = -\mathbb{E}_{x\sim p_{\text{real}}}\big[\log D(x)\big] - \mathbb{E}_{z\sim p_z}\big[\log(1 - D(G(z)))\big]. \tag{11}$$

2) Generator Loss (L_G): L_G measures the performance of the generator, as it attempts to "fool" the discriminator. The generator aims to minimize L_G. A lower L_G implies better realistic data generation. The L_G is given by (12), where $D(G(z))$ is the discriminator's prediction on generated data

$$L_G = -\mathbb{E}_{z\sim p_z}\big[\log D(G(z))\big]. \tag{12}$$

3) Chamfer Distance: CD evaluates the similarity between two point clouds, P and Q by calculating the sum of distances from each point in one set to its closest point in the other set. A smaller CD indicate better match between the two point and CD can be obtained from

$$CD(P, Q) = \sum_{p\in P} \min_{q\in Q} \|p - q\|^2 + \sum_{q\in Q} \min_{p\in P} \|p - q\|^2. \tag{13}$$

4) Ground Truth to Prediction ($GT \to Pred$): The $GT \to$ Pred metric calculates the average nearest-neighbor distance from points in the ground truth set GT to their closest points in the predicted set Pred. This measures how well the prediction covers the ground truth, with smaller values indicating closer alignment. $GT \to$ Pred is given by

$$GT \to \text{Pred} = \frac{1}{|GT|} \sum_{p\in GT} \min_{q\in \text{Pred}} \|p - q\|. \tag{14}$$

5) Prediction to Ground Truth ($Pred \to GT$): $Pred \to GT$ computes the average nearest-neighbor distance from points in the predicted set Pred to their closest points in the ground truth set GT. This evaluates the precision of the prediction relative to the ground truth. A lower value signifies a more precise prediction. Pred $\to GT$ is given by

$$\text{Pred} \to GT = \frac{1}{|\text{Pred}|} \sum_{q\in \text{Pred}} \min_{p\in GT} \|p - q\|. \tag{15}$$

C. Result Analysis

The performance of Point-KAN is tested against four different SOTA techniques, including LGAN-AE [47], PCN [53], 3-D-Capsule [69], and PF-Net [22]. Table I provides a comprehensive tabulation of the performance of Point-KAN against SOTA in terms of various evaluation metrics, including L_D, L_G, CD, $GT \to Pred$, and $Pred \to GT$. The generalizability and performance are ensured by the lower values obtained for these metrics, which directly relate to the reliability and trustworthiness of point cloud reconstruction, ensuring its adaptability for real-world deployment. Point-KAN achieves the lowest CD of 0.2654, demonstrating superior accuracy in point cloud reconstruction compared to other methods. This lower error rate further supports the model's trustworthiness, as it can accurately reconstruct missing data.

Point-KAN also maintains the lowest L_D of 1.0827 and L_G of 1.0420, indicating a stabilized adversarial training. The

Authorized licensed use limited to: Technological University of the Shannon. Downloaded on March 16,2026 at 07:34:59 UTC from IEEE Xplore. Restrictions apply.

TABLE I
SOTA COMPARISON OF POINT CLOUD REGENERATION AGAINST THE PROPOSED POINT-KAN, INCLUDING MODEL COMPLEXITY AND INFERENCE TIME

Experiment	L_D	L_G	CD	$GT \rightarrow Pred$	$Pred \rightarrow GT$	Parameters (M)	GFLOPs	Inference Time (s)
LGAN-AE [47]	2.1000	1.9500	0.3245	0.1567	0.1678	21.90	12.50	0.451
PCN [53]	1.9500	1.8800	0.3117	0.1523	0.1594	5.04	15.25	0.112
3D-Capsule [69]	2.0500	1.7600	0.3121	0.1534	0.1587	15.50	9.80	0.150
PF-Net [22]	1.0950	1.0301	0.2687	0.1324	0.1363	73.05	4.96	0.200
Point-KAN (Ours)	1.0827	1.0420	0.2654	0.1567	0.1087	93.35	6.33	0.102

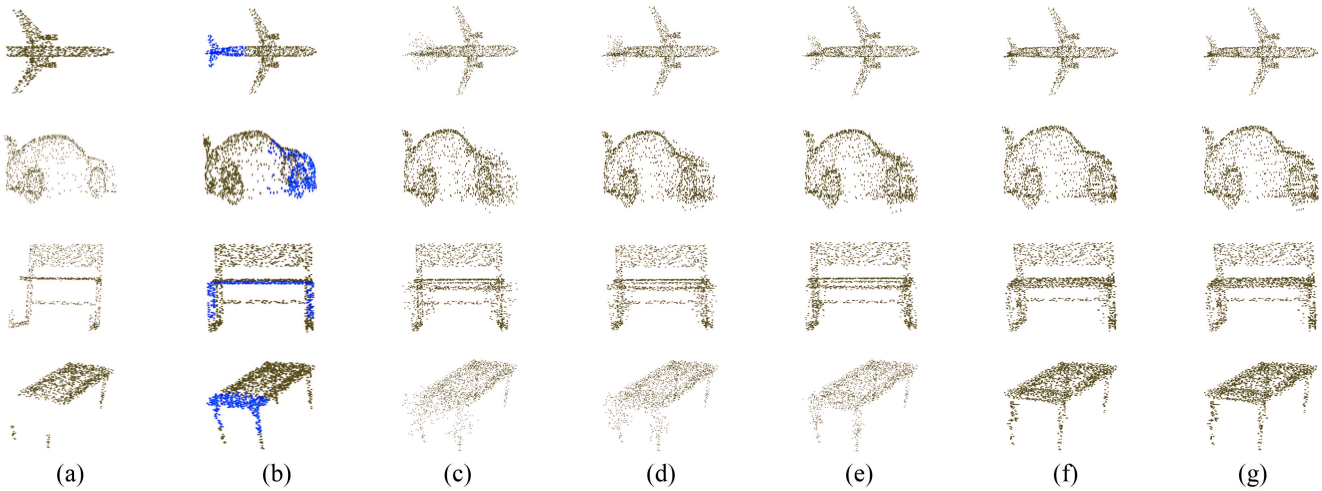

Fig. 6. Visualization of the point cloud reconstruction of proposed Point-KAN against various SOTA techniques across selected objects on ShapeNet. (a) Incomplete input, (b) Ground truth with missing points (blue color), (c) LGAN-AE, (d) PCN, (e) 3-D-Capsule, (f) PF-Net, and (g) Point-KAN.

bidirectional reconstruction errors with values of 0.1567 and 0.1087 suggest that Point-KAN could balance global structure and local details. The comparsion also reveals that PF-Net produce results comparable to Point-KAN. PF-net scored a *CD* of 0.2687 closer to 0.2654 of Point-KAN. However, PF-Net exhibits reconstruction errors of 0.1324 and 0.1363 which signifies minute losses in reconstructing finer deails. the L_G of PF-Net is 1.0301, which is slightly lower than 1.0420 of Point-KAN, indicating its capability to produce steady outputs with little compromise on accuracy. Despite this, Point-KAN ensures more reliable and robust feature completion, which is essential for guaranteeing trustworthy AI-driven point cloud completions. These quantifications indicate that Point-KAN can enhance detail more effectively than PF-Net, showcasing a slight edge over PF-Net.

Among all models against Point-KAN, the maximum value of *CD* exhibited by LGAN-AE at 0.3245 is indicative of its weakest reconstruction accuracy. The model contains the highest L_D of 2.1000 and L_G of 1.9500, pointing out its low stability during the adversarial training process. In contrast to LGAN-AE, PCN has improved performance measured by a lesser *CD* of 0.3117 and a better generator performance L_G of 1.8800. Even with these advantages, both models are inferior to Point-KAN, which achieves the lowest *CD* of 0.2654, indicating superior reconstruction quality. In addition, Point-KAN achieves significantly lower reconstruction errors of $GT \rightarrow Pred$ and $Pred \rightarrow GT$ than LGAN-AE and PCN. Table I also presents the complexity and computational efficiency of the SOTA methods for the number of parameters, GFLOPS, and inference time. Point-KAN achieves the best balance, with 93.35 M parameters, 6.33 GFLOPS, and the fastest inference time of 0.102 s. Compared to PF-Net with 73.05 M parameters, 4.96 GFLOPS, and 0.200 s inference time and other methods like PCN, 3-D-Capsule, and LGAN-AE, Point-KAN offers superior reconstruction accuracy with lower computational delay, highlighting its advantage in practical deployments.

Even when the size of the training dataset was decreased from 100% to 50%, 25%, and 10%, the CD stayed constant, rising only minimally from 0.2654 to 0.2763, 0.2960, and 0.3171, respectively, showcasing the model's resilience to minimal training data. The ability to generate highly accurate and stable point clouds reinforces the trustworthy nature of the proposed approach, making it well-suited for real-time 3-D reconstruction applications. Overall, the Point-KAN model outperforms PF-Net and other baselines in most aspects. The subjective evaluation of point cloud completions from various SOTA techniques against proposed Point-KAN is given in Fig. 6 and ensures the superior performance of the proposed method.

The model training performance of the proposed Point-KAN is shown in Fig. 7 in terms of the evaluation metrics L_D, and L_G. The training started with an unstable performance trend for both L_D and L_G. Although with minor oscillations, L_D eventually maintains a downward trend, which indicates learning adjustments made by the discriminator while rapidly making

Authorized licensed use limited to: Technological University of the Shannon. Downloaded on March 16,2026 at 07:34:59 UTC from IEEE Xplore. Restrictions apply.

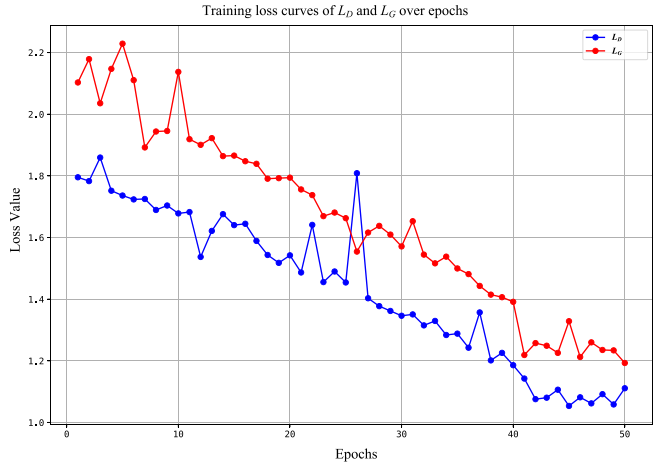

Fig. 7. Training performance of Point-KAN across evaluation metrics of L_D, and L_G.

its output distinct from real and generated point clouds. L_G also started with a similar trend of larger loss registration. However, at a higher epoch, the loss trend reversed and lowered, indicating that the generator learns how to generate more realistic point clouds. This stable convergence pattern ensures the reliability of the model, as it consistently refines its outputs to produce high-fidelity point cloud reconstructions. The overall trend suggests that both networks achieve a balanced adversarial learning state as training progresses, leading to improved point cloud generation quality. These characteristics are essential for trustworthy AI applications, ensuring that the generated 3-D structures are both accurate and reliable for deployment in real-time environments.

D. Ablation Experiment: Performance

The ablation study reveals the significance of various components in the proposed Point-KAN framework by comparing various model settings. Key metrics assessed include L_D, L_G, *CD*, $GT \rightarrow Pred$, and $Pred \rightarrow GT$. Table II provides the detailed quantification of these metrics on various ablation settings and shows that full Point-KAN configuration is superior. Full Point-KAN achieved the lowest *CD* of 0.2654, meaning the regenerated point cloud closely matches the ground truth. It also scored minimal values for $GT \rightarrow Pred$ and $Pred \rightarrow GT$, respectively, scoring 0.1567 and 0.1087. Additionally, the L_G is minimum at 1.0420, and the lower L_D score is 1.0827. This consistency in lower error values ensures that the reconstruction process is in alignment with the robust and reliable characteristics of trustworthy AI and is ready for real-world applications. Without MHA in AEFC had the lowest L_G of 1.0300. However, its L_D is higher at 1.1707, indicating the imbalance in L_D and L_G. This imbalance signifies that omitting MHA compromises the stability of adversarial training, affecting the model's stability and reliability. The results are not desirable for the Point-Net configuration with MLP instead of KAN. The *CD* lowered to 0.4428. The $GT \rightarrow Pred$ and $Pred \rightarrow GT$ also resulted in higher values of 0.2605 and 0.1823. This demonstrates that the KAN framework is essential for ensuring precise feature extraction, which is crucial for integrating trustworthy AI that is reliable in point cloud reconstruction.

The performance deficiency observed during the removal of MHA from AEFC and Kan-Attention from KEFM indicates the significance of MHA in the point cloud reconstruction task. When the skip connections are removed, a drastic performance loss occurs, and *CD* becomes a higher score of 0.3085. The $GT \rightarrow Pred$ and $Pred \rightarrow GT$ also resulted in higher values of 0.1624 and 0.1460. This emphasizes that retaining geometric details through skip connections is fundamental for ensuring AI-driven reconstructions remain stable and reliable. Each key block contributes its part to Point-KAN and makes Point-KAN capable of extracting features using KAN layers, attention mechanisms, and skip connections to result in a well-balanced reconstruction. These architectural choices align with the principles of trustworthy AI by ensuring robustness, and reliability in point cloud generation.

Fig. 8 shows the subjective evaluation of the ablation performance analysis in terms of reconstructions of various objects for different configurations without KAN, without MHA in AEFC, without KAN-Attention in KEFM, without skip, and full configuration Point-KAN. The subjective evaluation indicates that the Point-KAN performance without KAN and without MHA in AEFC was poor and could not produce a meaningful reconstruction. This shortfall in performance is clearly visible from the reconstruction of the car, guitar, table, and cup. The reconstruction of objects, such as airplanes, cars, caps, guns, and motorcycles also suffered and produced undependable point cloud completion. These deficiencies highlight the importance of structured feature learning for ensuring AI-driven systems generate reliable and accurate outputs. However, the model without the skip connections have poor quality whereas the full configuration of Point-KAN showcase superior reconstruction quality qualitatively and quantitatively. This clearly indicates that the reconstruction of point clouds is heavily dependent on the proposed KAN layers, MHA modules, and skip additions and serves as key components for effective and trustworthy AI-driven point cloud completion. The ability to produce stable and high-fidelity reconstructions ensures that Point-KAN is not only accurate but also dependable for deployment in real-time 3-D reconstruction applications.

E. Ablation Experiment: Complexity

Table III compared the number of parameters and training time for various Point-KAN configurations to reveal the balance between performance and complexity. Analysis of Table III in conjunction with Table II provides a much more detailed understanding. The full version of Point-KAN has the maximum total parameters of approximately 93.35 million and requires the longest time of 0.102 seconds per object completion. Completion under 1 s is promising for real-time applications without significant delay or latency, ensuring seamless integration with 6G-IoT-connected intelligence. Despite these increases, Table II shows that the full Point-KAN delivers the most accurate point cloud regeneration with lower L_G, *CD*, $GT \rightarrow Pred$, and $Pred \rightarrow GT$ scores of

Authorized licensed use limited to: Technological University of the Shannon. Downloaded on March 16,2026 at 07:34:59 UTC from IEEE Xplore. Restrictions apply.

TABLE II
COMPARISON OF DIFFERENT POINT CLOUD REGENERATION CONFIGURATIONS OF POINT-KAN ON SHAPENET DATASET
(BOLD VALUES REPRESENT BETTER PERFORMANCE)

Point-KAN Model Setting	L_D	L_G	CD	$GT \rightarrow Pred$	$Pred \rightarrow GT$
Without KAN (MLP instead of KAN)	0.9859	1.4630	0.4428	0.2605	0.1823
Without MHA in AEFC	1.1707	1.0300	0.2880	0.1703	0.1177
Without KAN-Attention in KEFM	1.1636	1.0533	0.2952	0.1755	0.1197
Without Skip Additions	0.1038	6.5556	0.3085	0.1624	0.1460
Point-KAN (Full)	1.0827	1.0420	0.2654	0.1567	0.1087

TABLE III
COMPARISON OF NUMBER OF PARAMETERS AND TRAINING TIME FOR VARIOUS POINT-KAN CONFIGURATIONS

Model Setting	Generator	Discriminator	Total Parameters	Completion Time (seconds)
Without KAN (MLP instead of KAN)	91,336,286	197,505	91,533,791	0.097
Without MHA in AEFC	78,378,584	197,856	78,576,440	0.092
Without KAN-Attention in KEFM	93,129,944	197,856	93,327,800	0.097
Without Skip Additions	93,147,294	197,856	93,345,150	0.097
Point-KAN (Full)	93,147,294	197,856	93,345,150	0.102

1.0420, 0.2654, 0.3163, and 0.2055. These lower error values reinforce the reliability and robustness essential for trustworthy AI-driven point cloud completion.

When KAN layers are removed, the number of parameters in the model decreases to approximately 91.53 million parameters, and the completion time per object also decreases to 0.097 s. However, this configuration weakens spatial relationship extraction and increases reconstruction errors. This indicates that KAN layers play a critical role in preserving geometric fidelity and ensuring the trustworthiness of the reconstructed data. The removal of MHA from AEFC still reduces the total parameters to 78.58 million, which is smaller than all other configurations in the comparison. Although it takes only 0.092 s for completion, the performance degradation observed previously indicates that this reduction in complexity does not allow the model to grasp fine-grained geometric features fully. Such decreases in the focus on speed compromise the reliability of point cloud reconstructions, which affect the trustworthiness of the proposed AI. Configurations without KAN-Attention in KEFM and without Skip have almost equal parameters of 93.32 million and 93.35 million with the same time of 0.097 s. Their limited capability to reconstruct confirms that an improved performance is not always related to a higher parameter count. This highlights the importance of architectural design choices, like incorporating KAN and attention mechanisms, for adhering to model trustworthiness and achieving dependable reconstructions.

Point-KAN completes point clouds in real-time with a completion time of around 0.102 seconds per sample with a total of 93.3 million parameters, which is marginally more than configurations without KAN or MHA, indicating the increased complexity for enhanced robustness and accuracy. The skip additions proved essential in maintaining structural integrity, and removing them severely impacted accuracy, as evident from Table II. Including skip connections guarantees constant feature propagation and lowers information loss during reconstruction, improving the model's resilience and delivering trustworthy outputs in real-time applications. Despite the modest parameter increase, the speed of completion remains less than a second, testifying its applicability to deployment on edge devices where latency processing is imperative. In addition, adopting light KAN layers and effective attention mechanisms ensures plausible computational requirements. Point-KAN could function well within the power and processing limitations of 6G-IoT edge settings through proper model compression or hardware acceleration, such as FPGA or mobile AI chips.

Point-KAN performs as best among the several setups. It exhibits excellent robustness and generalizability in processing noisy and incomplete point cloud data, supported by several critical mechanisms, including KAN layers and MHA modules connected through a residual-skip architecture. Its capacity to provide accurate and consistent point cloud completion in less than one second confirms its fit for real-time 6G-IoT systems, where intelligent and immersive applications depend mainly on low latency trustworthy AI.

V. CONCLUSION

The proposed Point-KAN is a trustworthy AI-driven real-time point cloud completion framework with reliable reconstructions preserving spatial-geometrical fidelity. The key AEFC and KEFM modules were integrated within a GAN framework, allowing for highly accurate, structurally consistent, and stable restoration of missing points. KAN integration enabled learnable activation functions that improved nonlinear spatial and 3-D geometric understanding in contrast to MLP-based methods. The MHA integration enabled the capturing of fine-grained local and global dependencies

Authorized licensed use limited to: Technological University of the Shannon. Downloaded on March 16,2026 at 07:34:59 UTC from IEEE Xplore. Restrictions apply.

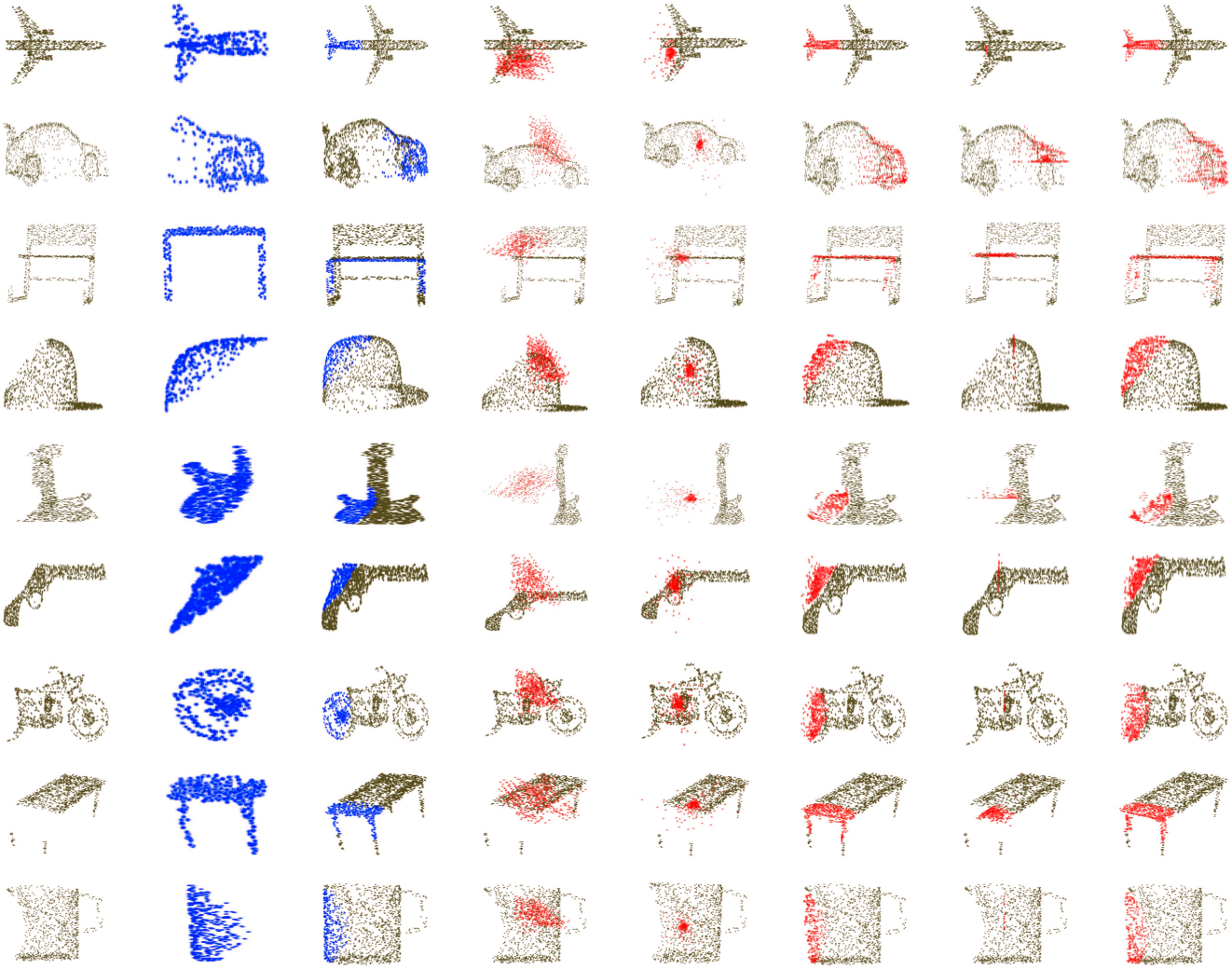

Fig. 8. Ablation study comparison for different configurations of Point-KAN across various objects on ShapeNet. (a) Incomplete input, (b) Missing points, (c) Ground truth, (d) Without KAN (Using MLP), (e) Without MHA in AEFC, (f) Without KAN-Attention in KEFM, (g) Without skip, and (h) Point-KAN.

across multiscale inputs. These capabilities make Point-KAN a highly resilient, trustworthy model that can be used in varying conditions. SOTA evaluation of Point-KAN confirmed trustworthy reconstruction with superior accuracy, shape completeness, and gradient stability. The ablation study ensured the module significance of KAN layers, MHA, and KAN-attention modules and their impacts to ensure trustworthy predictions. With its under 1-s completion time, Point-KAN is highly suitable for real-time deployment in autonomous systems. Its seamless 6G-IoT connectivity enables ultralow-latency point cloud completion and seamless connectivity for various applications, including autonomous vehicles, AR/VR systems, UAV-based mapping, and industrial robotics. This ensures continuous, real-time, and robust decision-making in dynamic environments. Future research can focus on further enhancing Point-KAN's trustworthiness by integrating transformer-based architectures for improved global and local context modeling. Optimizing Point-KAN for large-scale 3-D shape processing with adaptive point densities and resilience against random noise. Recognizing the growing importance of data security in IoT and communication systems, privacy-preserving strategies can be employed. Future iterations could include differential privacy techniques during training, and encrypted model weights or federated learning for secure deployment in sensitive environments. These improvements will drive next-generation real-time AI applications that demand reliability, robustness, and scalability.

REFERENCES

[1] N. H. B. Yang and Z. Dong, "Progress and perspectives of point cloud intelligence," *Geo-Spatial Inf. Sci.*, vol. 26, no. 2, pp. 189–205, 2023.

[2] B. Fei et al., "Comprehensive review of deep learning-based 3D point cloud completion processing and analysis," *IEEE Trans. Intell. Transp. Syst.*, vol. 23, no. 12, pp. 22862–22883, Dec. 2022.

[3] Z. Zhuang et al., "A survey of point cloud completion," *IEEE J. Sel. Topics Appl. Earth Observ. Remote Sens.*, vol. 17, pp. 5691–5711, 2024.

[4] R. Nespeca, C. Mariotti, L. Petetta, and A. Mandriota, "Point cloud segmentation in heritage preservation. Advanced digital process for historical houses," in *Proc. Int. Arch. Photogrammetry, Remote Sens. Spatial Inf. Sci.*, 2024, pp. 325–332. [Online]. Available: https://isprs-archives.copernicus.org/articles/XLVIII-2-W4-2024/325/2024/

Authorized licensed use limited to: Technological University of the Shannon. Downloaded on March 16,2026 at 07:34:59 UTC from IEEE Xplore. Restrictions apply.

[5] J. Wang et al., "Integrating BIM and LiDAR for real-time construction quality control," *J. Intell. Robot. Syst.*, vol. 79, no. 3, pp. 417–432, Aug. 2015. [Online]. Available: https://doi.org/10.1007/s10846-014-0116-8

[6] W. Huang, Y. Sun, X. Fu, X. Song, and S. He, "A novel LiDAR–camera fused player tracking system in soccer scenarios," *IEEE Sensors J.*, vol. 24, no. 9, pp. 15630–15642, May 2024.

[7] S. Ahmed, S. Abdullah, and S. H. Cho, "Advancements in radar point cloud processing for macro human movements in healthcare and assisted living domains: A review," *IEEE Sensors J.*, vol. 24, no. 22, pp. 36287–36305, Nov. 2024.

[8] M. Kazhdan, M. Bolitho, and H. Hoppe, "Poisson surface reconstruction," in *Proc. 4th Eurograph. Symp. Geomet. Process.*, 2006, pp. 61–70.

[9] A. Dai, C. R. Qi, and M. Nießner, "Shape completion using 3D-encoder-predictor CNNs and shape synthesis," in *Proc. IEEE Conf. Comput. Vis. Pattern Recognit. (CVPR)*, 2017, pp. 6545–6554.

[10] Y. Liu, B. Fan, S. Xiang, and C. Pan, "Relation-shape convolutional neural network for point cloud analysis," in *Proc. IEEE/CVF Conf. Comput. Vis. Pattern Recognit. (CVPR)*, 2019, pp. 8887–8896.

[11] H. Fan, H. Su, and L. Guibas, "A point set generation network for 3D object reconstruction from a single image," in *Proc. IEEE Conf. Comput. Vis. Pattern Recognit. (CVPR)*, 2017, pp. 2463–2471.

[12] R. Q. Charles, H. Su, M. Kaichun, and L. J. Guibas, "PointNet: Deep learning on point sets for 3D classification and segmentation," in *Proc. IEEE Conf. Comput. Vis. Pattern Recognit. (CVPR)*, 2017, pp. 77–85.

[13] C. R. Qi, L. Yi, H. Su, and L. J. Guibas, "PointNet++: Deep hierarchical feature learning on point sets in a metric space," 2017, *arXiv:1706.02413*.

[14] J. Chibane, T. Alldieck, and G. Pons-Moll, "Implicit functions in feature space for 3D shape reconstruction and completion," in *Proc. IEEE/CVF Conf. Comput. Vis. Pattern Recognit. (CVPR)*, 2020, pp. 6968–6979.

[15] H. Xie, H. Yao, S. Zhou, J. Mao, S. Zhang, and W. Sun, "GRNet: Gridding residual network for dense point cloud completion," in *Computer Vision*, A. Vedaldi, H. Bischof, T. Brox, and J.-M. Frahm, Eds. Cham, Switzerland: Springer Int., 2020, pp. 365–381.

[16] Y. Wang, D. J. Tan, N. Navab, and F. Tombari, "SoftPoolNet: Shape descriptor for point cloud completion and classification," in *Computer Vision*, A. Vedaldi, H. Bischof, T. Brox, and J.-M. Frahm, Eds. Cham, Switzerland: Springer Int., 2020, pp. 70–85.

[17] Y. Wang, Y. Sun, Z. Liu, S. E. Sarma, M. M. Bronstein, and J. M. Solomon, "Dynamic graph CNN for learning on point clouds," *ACM Trans. Graph.*, vol. 38, no. 5, p. 146, Oct. 2019. [Online]. Available: https://doi.org/10.1145/3326362

[18] K. Hassani and M. Haley, "Unsupervised multi-task feature learning on point clouds," in *Proc. IEEE/CVF Int. Conf. Comput. Vis. (ICCV)*, 2019, pp. 8159–8170.

[19] G. Qian, A. Abualshour, G. Li, A. Thabet, and B. Ghanem, "PU-GCN: Point cloud upsampling using graph convolutional networks," in *Proc. IEEE/CVF Conf. Comput. Vis. Pattern Recognit. (CVPR)*, 2021, pp. 11678–11687.

[20] L. Pan, "ECG: Edge-aware point cloud completion with graph convolution," *IEEE Robot. Autom. Lett.*, vol. 5, no. 3, pp. 4392–4398, Jul. 2020.

[21] H. Wu, Y. Miao, and R. Fu, "Point cloud completion using multiscale feature fusion and cross-regional attention," *Image Vis. Comput.*, vol. 111, Jul. 2021, Art. no. 104193. [Online]. Available: https://www.sciencedirect.com/science/article/pii/S0262885621000986

[22] Z. Huang, Y. Yu, J. Xu, F. Ni, and X. Le, "PF-Net: Point fractal network for 3D point cloud completion," in *Proc. IEEE/CVF Conf. Comput. Vis. Pattern Recognit. (CVPR)*, 2020, pp. 7659–7667.

[23] X. Wen et al., "PMP-Net++: Point cloud completion by transformer-enhanced multi-step point moving paths," *IEEE Trans. Pattern Anal. Mach. Intell.*, vol. 45, no. 1, pp. 852–867, Jan. 2023.

[24] P. Xiang et al., "Snowflake point deconvolution for point cloud completion and generation with skip-transformer," *IEEE Trans. Pattern Anal. Mach. Intell.*, vol. 45, no. 5, pp. 6320–6338, May 2023.

[25] X. Yu, Y. Rao, Z. Wang, Z. Liu, J. Lu, and J. Zhou, "PoinTr: Diverse point cloud completion with geometry-aware transformers," in *Proc. IEEE/CVF Int. Conf. Comput. Vis. (ICCV)*, 2021, pp. 12478–12487.

[26] S. Prokopchina, "Methodology for creating 'trustworthiness' artificial intelligence in systems based on the regularizing Bayesian approach," *Soft Meas. Comput.*, vol. 8, pp. 5–21, Jan. 2023.

[27] Z. Shao, J. Yang, and S. Ren, "Increasing the trustworthiness of deep neural networks via accuracy monitoring," 2020, *arXiv:2007.01472*. [Online]. Available: https://api.semanticscholar.org/CorpusID:220347137

[28] Z. Lv, Y. Han, A. K. Singh, G. Manogaran, and H. Lv, "Trustworthiness in industrial IoT systems based on artificial intelligence," *IEEE Trans. Ind. Informat.*, vol. 17, no. 2, pp. 1496–1504, Feb. 2021.

[29] D. Purves, S. Sturm, and J. Madock, "What to trust when we trust artificial intelligence (extended abstract)," in *Proc. AAAI/ACM Conf. AI, Ethics, Soc.*, vol. 7, Oct. 2024, pp. 1166–1166. [Online]. Available: https://ojs.aaai.org/index.php/AIES/article/view/31713

[30] R. Singh, M. Vatsa, and N. Ratha, "Trustworthy AI," in *Proc. 3rd ACM India Joint Int. Conf. Data Sci. Manage. Data (8th ACM IKDD CODS 26th COMAD)*, 2021, pp. 449–453. [Online]. Available: https://doi.org/10.1145/3430984.3431966

[31] Y. Wang, "A formal theory of AI trustworthiness for evaluating autonomous AI systems," in *Proc. IEEE Int. Conf. Syst., Man, Cybern. (SMC)*, 2022, pp. 137–142.

[32] T. Khinvasara, A. Shankar, and C. Wong, "Robustness and reliability testing in healthcare using artificial intelligence," *Asian J. Res. Comput. Sci.*, vol. 17, no. 7, pp. 103–118, Jul. 2024. [Online]. Available: https://journalajrcos.com/index.php/AJRCOS/article/view/482

[33] S. A. Salloum, *Trustworthiness of the AI*. Cham, Switzerland: Springer Nat., 2024, pp. 643–650. [Online]. Available: https://doi.org/10.1007/978-3-031-52280-2_41

[34] W. Zhao, S. Gao, and H. Lin, "A robust hole-filling algorithm for triangular mesh," *Vis. Comput.*, vol. 23, pp. 987–997, Aug. 2007. [Online]. Available: https://api.semanticscholar.org/CorpusID:3365551

[35] L. Yang, Q. Yan, and C. Xiao, "Shape-controllable geometry completion for point cloud models," *Vis. Comput.*, vol. 33, pp. 385–398, Feb. 2016. [Online]. Available: https://api.semanticscholar.org/CorpusID:22004554

[36] Z. Cai, C. Wang, C. Wen, and J. Li, "3D-PatchMatch: An optimization algorithm for point cloud completion," in *Proc. 2nd IEEE Int. Conf. Spatial Data Min. Geograph. Knowl. Services (ICSDM)*, 2015, pp. 157–161. [Online]. Available: https://api.semanticscholar.org/CorpusID:5274941

[37] L. Nan, K. Xie, and A. Sharf, "A search-classify approach for cluttered indoor scene understanding," *ACM Trans. Graph.*, vol. 31, no. 6, pp. 1–10, 2012. [Online]. Available: https://api.semanticscholar.org/CorpusID:13926850

[38] Y. Li, A. Dai, L. J. Guibas, and M. Nießner, "Database-assisted object retrieval for real-time 3D reconstruction," *Comput. Graph. Forum*, vol. 34, no. 2, pp. 435–446, 2015. [Online]. Available: https://api.semanticscholar.org/CorpusID:3145626

[39] Y. Shi, P. Long, K. Xu, H. Huang, and Y. Xiong, "Data-driven contextual modeling for 3D scene understanding," *Comput. Graph.*, vol. 55, pp. 55–67, Apr. 2016. [Online]. Available: https://api.semanticscholar.org/CorpusID:14156149

[40] Z. Wu et al., "3D ShapeNets: A deep representation for volumetric shapes," in *Proc. IEEE Conf. Comput. Vis. Pattern Recognit. (CVPR)*, 2014, pp. 1912–1920. [Online]. Available: https://api.semanticscholar.org/CorpusID:206592833

[41] D. T. Nguyen, B.-S. Hua, M.-K. Tran, Q.-H. Pham, and S.-K. Yeung, "A field model for repairing 3D shapes," in *Proc. IEEE Conf. Comput. Vis. Pattern Recognit. (CVPR)*, 2016, pp. 5676–5684. [Online]. Available: https://api.semanticscholar.org/CorpusID:7422055

[42] X. Han, Z. Li, H. Huang, E. Kalogerakis, and Y. Yu, "High-resolution shape completion using deep neural networks for global structure and local geometry inference," in *Proc. IEEE Int. Conf. Comput. Vis. (ICCV)*, 2017, pp. 85–93. [Online]. Available: https://api.semanticscholar.org/CorpusID:3052611

[43] X. Wang, M. H. Ang, and G. H. Lee, "Voxel-based network for shape completion by leveraging edge generation," in *Proc. IEEE/CVF Int. Conf. Comput. Vis. (ICCV)*, 2021, pp. 13169–13178. [Online]. Available: https://api.semanticscholar.org/CorpusID:237266438

[44] Y. Yang, C. Feng, Y. Shen, and D. Tian, "FoldingNet: Point cloud auto-encoder via deep grid deformation," in *Proc. IEEE/CVF Conf. Comput. Vis. Pattern Recognit.*, 2017, pp. 206–215. [Online]. Available: https://api.semanticscholar.org/CorpusID:8338993

[45] Y. Shen, C. Feng, Y. Yang, and D. Tian, "Mining point cloud local structures by kernel correlation and graph pooling," in *Proc. IEEE/CVF Conf. Comput. Vis. Pattern Recognit.*, 2017, pp. 4548–4557. [Online]. Available: https://api.semanticscholar.org/CorpusID:4578850

[46] X. Wen, T. Li, Z. Han, and Y.-S. Liu, "Point cloud completion by skip-attention network with hierarchical folding," in *Proc. IEEE/CVF Conf. Comput. Vis. Pattern Recognit. (CVPR)*, 2020, pp. 1936–1945. [Online]. Available: https://api.semanticscholar.org/CorpusID:218571351

[47] P. Achlioptas, O. Diamanti, I. Mitliagkas, and L. J. Guibas, "Learning representations and generative models for 3D point clouds," in *Proc. Int. Conf. Mach. Learn.*, 2017, pp. 1–22. [Online]. Available: https://api.semanticscholar.org/CorpusID:23102425

Authorized licensed use limited to: Technological University of the Shannon. Downloaded on March 16,2026 at 07:34:59 UTC from IEEE Xplore. Restrictions apply.

[48] S. Gurumurthy and S. Agrawal, "High fidelity semantic shape completion for point clouds using latent optimization," in *Proc. IEEE Winter Conf. Appl. Comput. Vis. (WACV)*, 2018, pp. 1099–1108. [Online]. Available: https://api.semanticscholar.org/CorpusID:49666582

[49] M. Sarmad, H. J. Lee, and Y. Kim, "RL-GAN-net: A reinforcement learning agent controlled GAN network for real-time point cloud shape completion," in *Proc. IEEE/CVF Conf. Comput. Vis. Pattern Recognit. (CVPR)*, 2019, pp. 5891–5900. [Online]. Available: https://api.semanticscholar.org/CorpusID:139103260

[50] W. Zhang, Q. Yan, and C. Xiao, "Detail preserved point cloud completion via separated feature aggregation," 2020, *arXiv:2007.02374*.

[51] P. Spurek et al., "HyperPocket: Generative point cloud completion," in *Proc. IEEE/RSJ Int. Conf. Intell. Robots Syst. (IROS)*, 2021, pp. 6848–6853. [Online]. Available: https://api.semanticscholar.org/CorpusID:231879681

[52] L. Yu, X. Li, C.-W. Fu, D. Cohen-Or, and P.-A. Heng, "PU-Net: Point cloud upsampling network," in *Proc. IEEE/CVF Conf. Comput. Vis. Pattern Recognit.*, 2018, pp. 2790–2799. [Online]. Available: https://api.semanticscholar.org/CorpusID:4383645

[53] W. Yuan, T. Khot, D. Held, C. Mertz, and M. Hebert, "PCN: Point completion network," *Proc. Int. Conf. 3D Vis. (3DV)*, 2018, pp. 728–737. [Online]. Available: https://api.semanticscholar.org/CorpusID:51908879

[54] L. Zhao, Y. Hu, X. Yang, Z. Dou, and L. Kang, "Robust multi-task learning network for complex LiDAR point cloud data preprocessing," *Expert Syst. Appl.*, vol. 237, Mar. 2024, Art. no. 121552. [Online]. Available: https://api.semanticscholar.org/CorpusID:262030919

[55] X. Chen, B. Chen, and N. J. Mitra, "Unpaired point cloud completion on real scans using adversarial training," *ArXiv*, vol. abs/1904.00069, 2019. [Online]. Available: https://api.semanticscholar.org/CorpusID:90258365

[56] L. Tan, X. Lin, D. Niu, D. Wang, M. Yin, and X. Zhao, "Projected generative adversarial network for point cloud completion," *IEEE Trans. Circuits Syst. Video Technol.*, vol. 33, pp. 771–781, Feb. 2023. [Online]. Available: https://api.semanticscholar.org/CorpusID:252116463

[57] X. Liu, Y. Ma, K. Xu, J. Wan, and Y. Guo, "AGFA-Net: Adaptive global feature augmentation network for point cloud completion," *IEEE Geosci. Remote Sens. Lett.*, vol. 19, pp. 1–5, 2022. [Online]. Available: https://api.semanticscholar.org/CorpusID:251606711

[58] H. Son and Y. Kim, "SAUM: Symmetry-aware upsampling module for consistent point cloud completion," in *Proc. Asian Conf. Comput. Vis.*, 2020, pp. 1–17. [Online]. Available: https://api.semanticscholar.org/CorpusID:229651593

[59] X. Zhang et al., "View-guided point cloud completion," in *Proc. IEEE/CVF Conf. Comput. Vis. Pattern Recognit. (CVPR)*, 2021, pp. 15885–15894. [Online]. Available: https://api.semanticscholar.org/CorpusID:233210187

[60] D. Stutz and A. Geiger, "Learning 3D shape completion from laser scan data with weak supervision," in *Proc. IEEE/CVF Conf. Comput. Vis. Pattern Recognit.*, 2018, pp. 1955–1964. [Online]. Available: https://api.semanticscholar.org/CorpusID:46901688

[61] X. Yu, Y. Rao, Z. Wang, J. Lu, and J. Zhou, "AdaPoinTr: Diverse point cloud completion with adaptive geometry-aware transformers," *IEEE Trans. Pattern Anal. Mach. Intell.*, vol. 45, no. 12, pp. 14114–14130, Dec. 2023. [Online]. Available: https://api.semanticscholar.org/CorpusID:255595831

[62] W. Yan, R. Zhang, J. Wang, S. Liu, T. H. Li, and G. Li, "Vaccine-style-net: Point cloud completion in implicit continuous function space," in *Proc. 28th ACM Int. Conf. Multimedia*, 2020, pp. 2067–2075. [Online]. Available: https://api.semanticscholar.org/CorpusID:222278498

[63] J. Xu, Y. Zhang, Y. Zou, and P. X. Liu, "Sequence generation completion method and resolution scaling network for point cloud completion," *IEEE Trans. Geosci. Remote Sens.*, vol. 62, pp. 1–15, 2024.

[64] N. Liu, X. Zhang, L. Wang, L. Xu, and S. Zhu, "3-D point cloud object completion via RGB images with complex geometric topology in urban scenes," *IEEE Geosci. Remote Sens. Lett.*, vol. 22, pp. 1–5, 2025.

[65] X. Yu, J. Li, C.-C. Wong, C.-M. Vong, and Y. Liang, "FACNet: Feature alignment fast point cloud completion network," *Comput. Vis. Media*, vol. 11, no. 1, pp. 141–157, 2025.

[66] Y. Liu and Z. Liu, "Low overlapping point cloud registration using mutual prior based completion network," *IEEE Trans. Image Process.*, vol. 33, pp. 4781–4795, 2024.

[67] S. Li, P. Gao, X. Tan, and W. Xiang, "RLGrid: Reinforcement learning controlled grid deformation for coarse-to-fine point cloud completion," *IEEE Trans. Multimedia*, vol. 27, pp. 860–874, 2025.

[68] K. He, X. Zhang, S. Ren, and J. Sun, "Deep residual learning for image recognition," in *Proc. IEEE Conf. Comput. Vis. Pattern Recognit.*, 2016, pp. 770–778.

[69] Y. Zhao, T. Birdal, H. Deng, and F. Tombari, "3D point capsule networks," in *Proc. IEEE/CVF Conf. Comput. Vis. Pattern Recognit. (CVPR)*, 2019, pp. 1009–1018.

Arun kumar Sangaiah (Senior Member, IEEE) received the Ph.D. degree from the School of Computer Science and Engineering, VIT University, Vellore, India, in 2014.

He is currently a Distinguished Professor with the National Yunlin University of Science and Technology, Douliu, Taiwan. He also serves as a Visiting Professor with the School of Engineering and Technology, Sunway University, Petaling Jaya, Malaysia, and with Chandigarh University, Ludhiana, India. He was a Visiting Scientist with the Chinese Academy of Sciences, Beijing, China, from 2018 to 2019, and a Visiting Researcher with Universite Paris-'Est, Créteil, France, from 2019 to 2020. His Google Scholar Citations reached 26008+ with H-index: 91 and i10-index: 341. He has published more than 150 research articles in refereed journals, 11 edited books, as well as one patents (held and filed) and six projects, among four funded by National Science and Technology Council, Taiwan, the Ministry of IT of India, and few international projects (CAS, Guangdong Research fund, Australian Research Council) cost worth of 500 000 USD.

Dr. Sangaiah has received many awards, including the Yushan Young Scholar, the Clarivate Highly Cited Researcher (2021, 2022, and 2023), a Top 2% Scientist (Stanford Report-2020, 2021, and 2022), a PIFI-CAS Fellowship, a Top-10 Outstanding Researcher, and a CSI significant Contributor. Also, he is responsible for the editor-in-chief and an associate editor of various reputed ISI journals.

Jayakrishnan Anandakrishnan (Member, IEEE) received the bachelor's degree in computer science and engineering from Kerala University, Thiruvananthapuram, India, in 2011, the master's degree in computer science with a specialization in Image Processing from Cochin University of Science and Technology, Kochi, India, in 2013, and the Ph.D. degree in computer science and engineering from the National Institute of Technology Puducherry, Karaikal, India, in 2025.

He expanded his expertise through an internship with the International Internship Pilot Program funded by the National Science and Technology Council of Taiwan, further enriching his knowledge and experience in his field. His research interests encompass machine learning, remote sensing, geospatial analytics, IoT, and edge computing.

Sujith Kumar (Member, IEEE) received the Bachelor of Technology degree in computer science and engineering from APJ Abdul Kalam Technological University, Thiruvananthapuram, Kerala, in 2023. He is currently pursuing the Master of Technology degree in computer science and engineering with the National Institute of Technology Puducherry, Karaikal, India.

From November 2024 to January 31, 2025, he participated in the International Internship Pilot Program at the International Graduate School of Artificial Intelligence, National Yunlin University of Science and Technology, Douliu, Taiwan. His research interests include remote sensing, deep learning, IoT, and computer vision.

Authorized licensed use limited to: Technological University of the Shannon. Downloaded on March 16,2026 at 07:34:59 UTC from IEEE Xplore. Restrictions apply.

Gui-Bin Bian (Member, IEEE) received the B.E. degree in mechanical engineering from the North China University of Technology, Beijing, China, in 2004 and the M.E. and Ph.D. degrees in mechanical engineering from Beijing Institute of Technology, Beijing, in 2007 and 2010, respectively.

He is a Professor with the State Key Laboratory of Multimodal Artificial Intelligence Systems, Institute of Automation, Chinese Academy of Sciences, Beijing. His research interests include medical robotics and human–robot interaction.

Salman A. Alqahtani (Member, IEEE) received the bachelor's degree in computer engineering from King Fahd University of Petroleum & Minerals, Dhahran, Saudi Arabia, in 1997, the master's degree in computer engineering from King Saud University, Riyadh, Saudi Arabia, in 2003, and the Ph.D. degree in computer science and engineering from King Fahd University of Petroleum & Minerals, Dhahran, Saudi Arabia, in 2007.

He is currently a Full Professor and New Emerging Technologies and 5G Network and Beyond Research Chair with the Department of Computer Engineering, College of Computer and Information Sciences, King Saud University, Riyadh, Saudi Arabia. His research interests include radio resource management for wireless and cellular networks (4G, 5G, the IoT, industry 4.0, LTE, LTE-advanced, femtocell, cognitive radio, and cyber sovereignty) with a focus on call admission control, packet scheduling, radio resource sharing, and the quality of service guarantees for data services.

Dirk Draheim (Member, IEEE) received the Ph.D. degree from Freie Universität Berlin, Berlin, Germany, and the Habilitation degree from Universität Mannheim, Mannheim, Germany, in 2002.

He is a Full Professor of Information Society Technology with Tallinn University of Technology, Tallinn, Estonia, where he is the Head of the Information Systems Group. The Information Systems Group conducts research in large and ultralarge-scale IT systems. He is also an Initiator and the Leader of numerous digital transformation initiatives. He is an author of the Springer books Business Process Technology, Semantics of the Probabilistic Typed Lambda Calculus, and Generalized Jeffrey Conditionalization; and a coauthor of the Springer book Form-Oriented Analysis.

Authorized licensed use limited to: Technological University of the Shannon. Downloaded on March 16,2026 at 07:34:59 UTC from IEEE Xplore. Restrictions apply.